SWISS+
TECHNOLOGY

NSVA SERIES
VAV SMART DAMPER ACTUATOR

Modulation control
5 Nm

NENUTEC®

INNOVATIVE MEMBER OF SWISOTEC

NENUTEC ASIA PACIFIC PTE LTD
7030 Ang Mo Kio Ave 5
#03-56 Northstar @ AMK
Singapore 569 880

(65) 6570 3233
(65) 6570 6783
info@nenutec.com.sg

© Nenutec Asia Pacific Pte. Ltd.

www.nenutec.com.sg

NSVA SERIES
VAV SMART DAMPER ACTUATOR

Modulating Control
5 Nm

NSVA SERIES

NSVA VAV smart damper actuators provides with high performance DDC (direct digital control) of pressure-independent, VAV(variable-air-volume) function are designed and produced for extended functionalities in HVAC systems, VAV and laboratory applications.

PRODUCT FEATURE

- Torque 5 Nm
- Damper size 1.0 m^2
- BACNET MS/TP for Building Automation system
- 128 Binary value (BV), 128 Analog value (AV)
- Compact with Actuator +Controller +Communication + Flow
- Actuator with Pluggable terminal & RJ11 connection
- Selectable direction of rotation of reversing actuator
- Adjustable angle of rotation (Mechanical)
- Selectable direction of rotation by switch
- Selectable baud rate

MODEL SELECTION TABLE

MODEL / TYPE	TORQUE	POWER SUPPLY	PRESSURE DIFF.	INPUT / OUTPUT			
				Ai0, 1		Do0, 1	Ao0, 1
NSVA 0000BL	5 Nm	AC 100-277 ±10%	0...500 Pa	0		0	0
NSVA 0000B	5 Nm	AC 24 V ±10%	0...500 Pa	0		0	0
NSVA 0200BL	5 Nm	AC 100-277 ±10%	0...500 Pa	Ai0 10 KΩ	Ai1 0-10VDC	0	0
NSVA 0200B	5 Nm	AC 24 V ±10%	0...500 Pa			0	0
NSVA 0222B	5 Nm	AC 24 V ±10%	0...500 Pa			2 (24VAC)	2 (0-10 VDC)

© Nenutec Asia Pacific Pte. Ltd.

DIMENSION (mm)

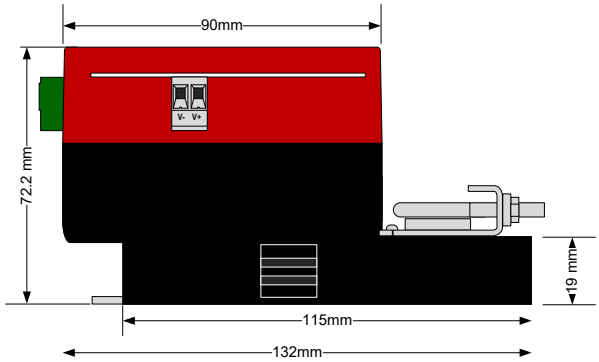

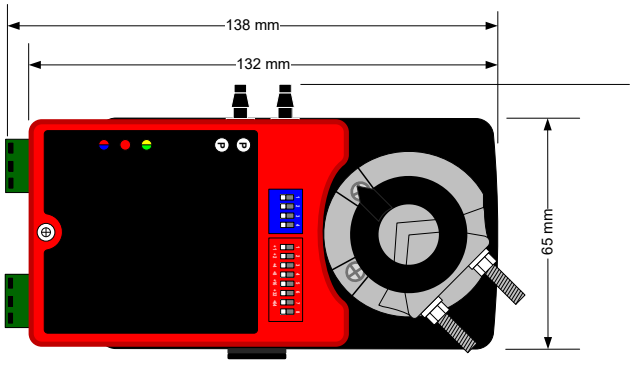

TECHNICAL SPECIFICATION

MODEL NUMBER	**NSVA**
TORQUE	5 Nm
DAMPER SIZE	1.0 m^2
SHAFT DIMENSION	From Ø 6 to 16 mm round / 5 to 12 mm square
CONTROL SIGNAL	Modulation control
RUNNING TIME	75...85 sec
POWER SUPPLY	
NSVA XXXXBL	AC 100-277VAC - 50/60Hz ± 10%
NSVA XXXXB	AC 24V - 50/60Hz ± 10%
POWER CONSUMPTION	
● **OPERATING**	1.5 W
● **END POSITION**	0.5 W
CONNECTION	
● **ACTUATOR**	Pluggable terminal 5.0
● **HMI**	RJ11
● **FLOW**	Outside diameter 3.175 mm(0.125”)
PROTECTION CLASS	Class II ⧈
ANGLE OF ROTATION	90° (95° mechanical)
ROTATION	Selectable direction of rotation by DIP switch
MANUAL OF ROTATION	Manual of rotation by push button in the side
MAX . 95° ANGLE OF LIMITING	Can be limited at both ends with adjustable mechanical end stops
DIP switch	
● **SW1**	Baud rate & Terminating Resistor & Rotation select
● **SW2**	MAC address setting
SOUND LEVEL MOTOR AND EFS	42 dB (A)
IP PROTECTION	IP30
MAINTENANCE	Maintenance Free

NSVA SERIES
VAV SMART DAMPER ACTUATOR
Modulating Control
5 Nm

WEIGHT	
● NSVA 0000B, NSVA 0200B	600g
● NSVA 0200BL, NSVA 0200BL	680g
● NSVA 0222B	700g
LIFE CYCLE ACTUATOR	100'000 full cycles
FOR WIRE SIZING	14 VA
MCU	32 bit MCU
MEMORY	384K Flash, 8K FRAM & 1M Flash memory
COMMUNICATION	
● ACTUATOR	BACNET MS/TP RTU RS-485, 9600-76800 BPS, 1200M
● HMI	MODBUS RTU RS-485, 9600 BPS, 30M
FLOW SENSOR	
● TYPE	Differential sensor, I2C, 16BIT
● SPAN	0...500 Pa
● MEASUREMENT RANGE	(0 to 23 m/s)
● ACCURACY	± 5% reading
INPUT	
● ANALOG INPUT(AI0)	Dry contact for any kind input, include occupy sensor for energy saving Thermistor 10k (type II)
● ANALOG OUTPUT(AO0,1)	0-10 VDC , 4-20mA ,12 bits resolution ,Select by plug inside actuator
POWER OUTPUT	24VDC 80mA for sensor, NSVA0200BL,NSVA0200BL only RJ11 to 12VDC 100mA ,For HMI thermostat connected.
INDICATION	
● HMI	Red & Green led – Type(upper)
● POWER	Green led(Middle)
● BACNET MS/TP	Red & Blue led – Type(lower)
OPERATING	0...50°C, 20...90%RH, non condensing
SHIPPING AND STORAGE	-4°F to 158°F (-20°C to 70°C), 5% to 95% RH non-condensing
BACNET	BACnet Application Specific Controller (B-ASC)
EMC	CE according to 2004/108 / EC

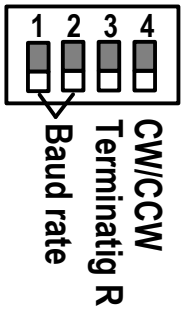

- **SW4(S1,2) → SET BAUD RATE OF COMMUNICATION**

Factory-set 38.4k, The baud rate of communication can be changed by the baud rate switch (Slide 1, 2 of SW1) on the actuator's housing.

- **SW4(S4) → CHANGING DIRECTION OF ROTATION**

Factory-set CW, The direction of rotation can be changed by the CW/CCW switch (Slide 4 of SW4) on the actuator's housing.

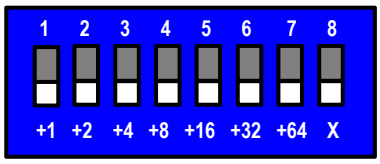

- **SW8 → SET MAC ADDRESS OF ACTUATOR**

Factory-set NO.1, The MAC address of actuator can be changed by the MAC address switch (Slide 1-7 of SW8) on the actuator's housing, Slide 8 of SW8 no use.

TECHNICAL SPECIFICATION

- **NSVA0000BL, NSVA0200BL POWER INPUT**

NSVAxxxxBL is powered by 100-277 Vac only. Power wiring connects to the two screw terminals on the controller L (Hot) N (Common). Earth ground connection is required.

- **POWER INPUT, AI, MS/TP**

Pluggable terminal block.

- **HBUS (HMI COMMUNICATION PORT)**

RJ11 connector.

- **PRESSURE SENSOR**

PE tube → No direction

Upper flow → P, Lower flow → P

Outside diameter 3.175mm(0.125")

- **STATUS INDICATION**

Upper (Yellow & blue led)

→ HMI

Middle (Red led)

→ Power

Lower (Yellow & blue led)

→ BACNET MS/TP

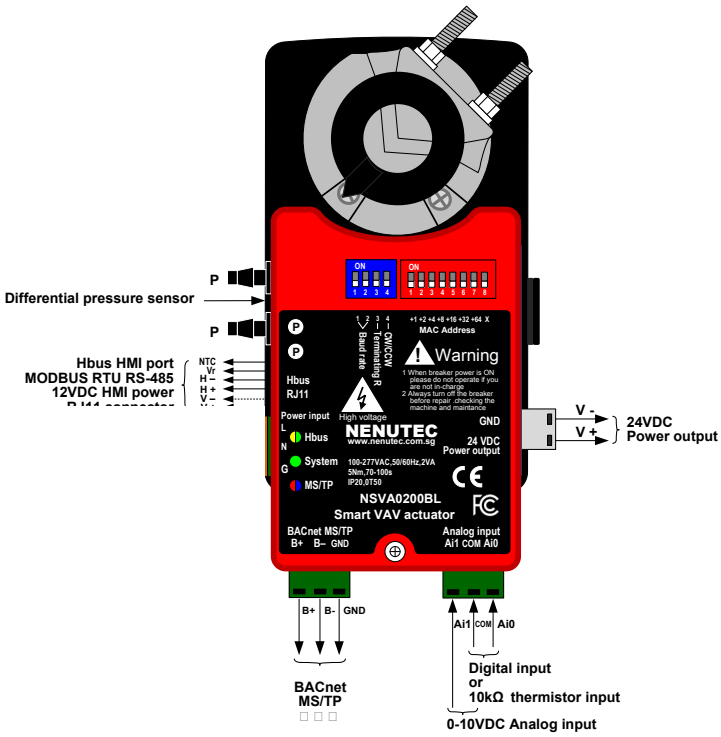

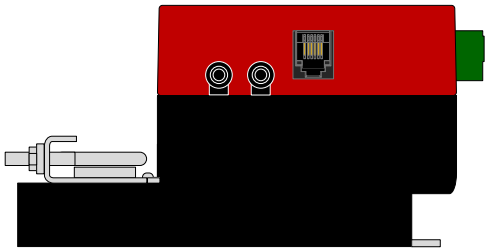

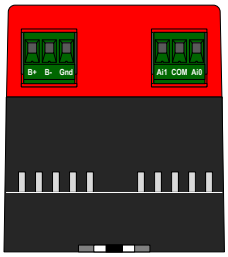

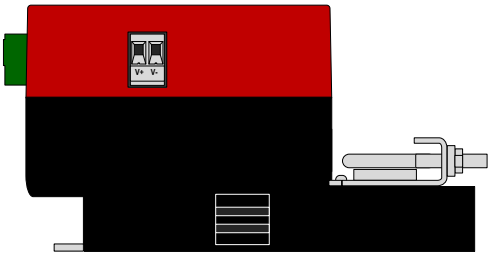

NSVA SERIES
VAV SMART DAMPER ACTUATOR
Modulating Control
5 Nm

USB TOOL FOR VAV ACTUATOR

VAV actuator firmware update by USB tool

GATEWAY FOR VAV ACTUATOR

GATEWAY for VAV actuator connect with Building Management System

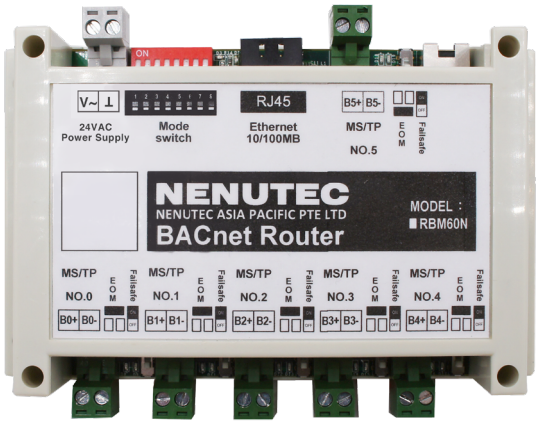

ICDT BACNET DDC FREE PROGRMMER

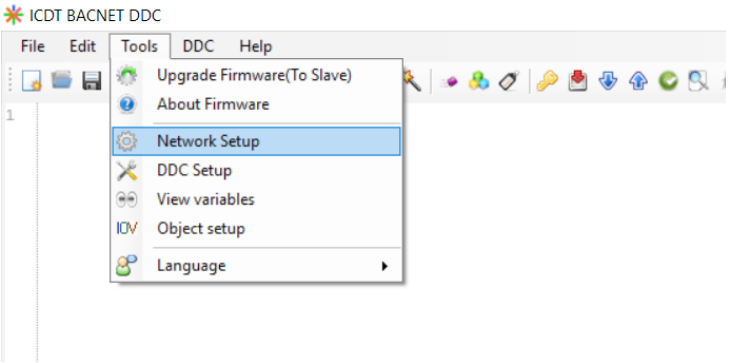

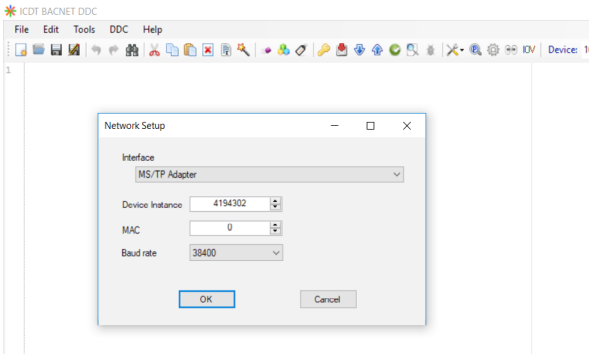

VAV SYSTEM

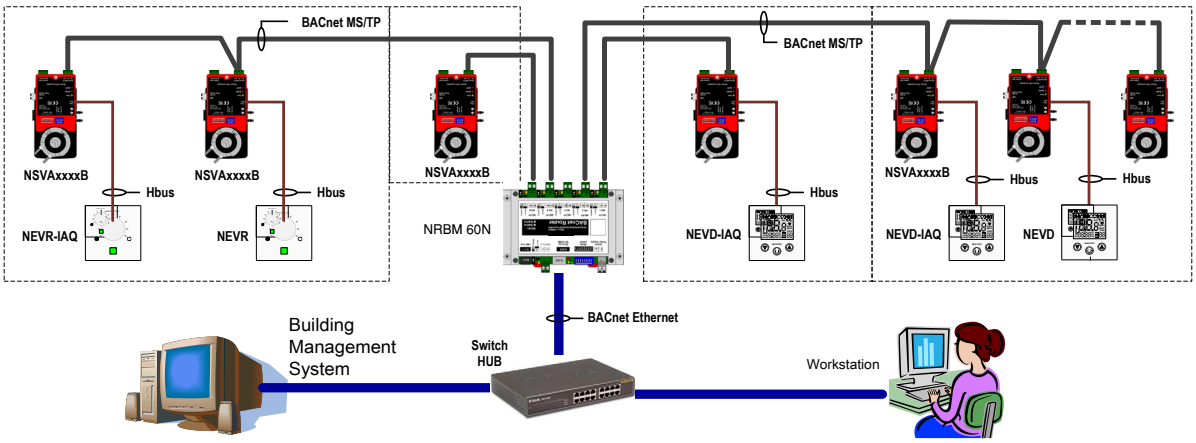

INSTALLATION / MOUNTING INSTRUCTION

Releasing the adapter is not required

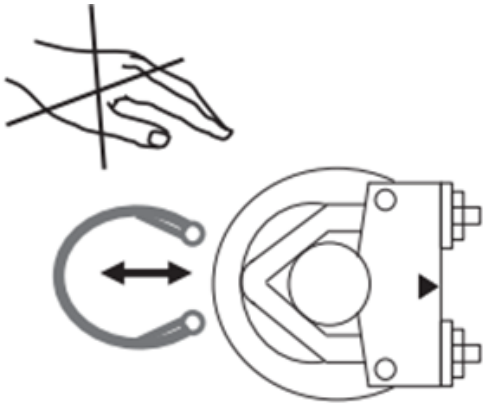

MECHANICAL LIMITING ANGLE OF ROTATION

Adjustment of mechanical limiter
1. Loosen screw of mechanical limiter
2. Move limiter to appropriate position *
3. Tighten screw

* Working range of 90º can be reduced up to 30º from each end position

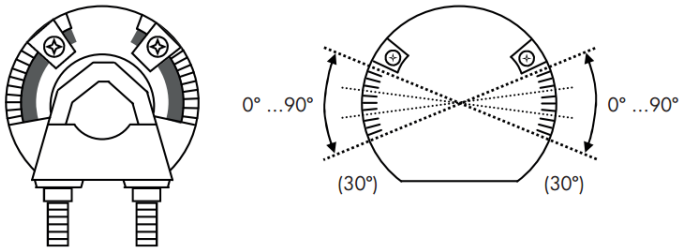

IMPORTANT REMARK

For special requirement, consult your local Nenutec's representative.

This actuator includes electrical and electronic components and may not be disposed as household garbage. Please consider the local valid legislation.

AC / DC 24 V: Connect via safety isolating transformer.
AC 230 V: To isolate from the main power supply, the system must incorporate a device which disconnects the phase conductor (with at least a 3mm contact gap.)

The performance specifications are nominal and conform to acceptable industry standards. NENUTEC shall not be liable for damages resulting from misapplication or misuse of its products.